Yvette Kasamon, M.D.
Johns Hopkins Oncology

INTRODUCTION AND SPECIFIC AIMS

There is a need for more effective and less toxic therapies for patients with poorer-risk Hodgkin's lymphoma (HL). Recent insights into the biology of HL have identified potential new immunotherapeutic targets for this disease. However, further definition of the appropriate immunologic targets is needed, as well as of the appropriate setting in which to administer these therapies.

Immunomodulatory therapies such as vaccines can elicit significant anti-tumor responses early following chemotherapy, prior to full immune reconstitution.[1] This provides rationale for the investigation of adjuvant vaccine strategies.

There is a paucity of clinical experience with the immunotherapy of HL, particularly with regard to cancer vaccines. This study incorporates immunotherapy in a setting which has not yet been investigated: as an adjuvant vaccine following completion of first-line chemotherapy or chemoradiation for HL.

Primary objectives:

- To determine whether detectable immunologic responses can be generated to single-agent KGEL vaccine following initial therapy of HL.
- To evaluate the durability of these immunologic responses.
- To evaluate the utility of an EBV reporter system for monitoring cellular vaccine responses.
- To further describe the safety and tolerability of the vaccine.

Secondary objectives:

- To estimate the event-free survival with this regimen.
- To investigate the relationship between vaccine administration and changes in uptake on FDG-PET.
- To investigate the relationship between vaccine administration and new plasma or serum biomarkers of stem cell therapies.

BACKGROUND AND PRELIMINARY RESULTS

GM-CSF producing cancer vaccines: immunologic and clinical effects

Tumor cell-based vaccine strategies seek to enhance the immunogenicity of tumor cells by modifying them *in vitro* to express immunomodulatory cytokines. Dr. Levitsky's group and many others have demonstrated the generation of T-cell mediated systemic anti-tumor immunity capable of eradicating a small, pre-established tumor burden in certain murine models. The vaccination site contains an influx of eosinophils, activated macrophages, and dendritic cells, with complete destruction of the vaccinating tumor cells within three to five days.[2,3] GM-CSF producing tumor vaccines act by recruiting and activating professional APCs which process antigens liberated from the irradiated tumor cells at the vaccine site and then migrate to the draining lymph nodes. Here, processed antigen is presented to tumor-specific T-cells leading to their activation.

APCs are critical in the priming phase of this response. This is underscored by Dr. Levitsky's demonstration that tumor-specific $CD8^+$ cytotoxic T- lymphocytes are actually primed by bone marrow derived APCs that have processed exogenous tumor antigen in response to vaccination ("cross-priming"), rather than by tumor presentation of endogenous antigen.[4] Significantly, this provides a rationale for the use of allogeneic tumor cells as a source of antigen in clinical settings where collection of autologous tumor is not feasible, as in HL.

The efficacy of GM-CSF transduced tumor vaccines has been demonstrated in animal models of various solid tumors as well as acute leukemia[5] and B-cell lymphoma.[6] In Phase I trials, patients with renal cell carcinoma, prostate cancer, melanoma, and non-small cell lung cancer have been vaccinated with irradiated, autologous GM-CSF expressing tumor cells. In addition, early phase trials of allogeneic GM-CSF-secreting tumor cell lines have been conducted in pancreatic cancer and prostate cancer. The clinical data available to date reveal minimal toxicities (local swelling and tenderness at the vaccine site) at doses as high as 5 x 10^8 cells per injection, with tumor cells secreting up to 1000 ng GM-CSF/10^6 cells/24 hours (i.e. up to 500 micrograms of GM-CSF/day), with serum GM-CSF levels peaking 3 days post vaccine and becoming undetectable by 7 days. Biopsies of vaccine sites, delayed type hypersensitivity (DTH) sites, and cutaneous melanoma metastases have revealed cellular infiltrates that are strikingly similar to those of mouse models. Nearly all patients tested have "converted" from being unresponsive to DTH skin testing with unmodified irradiated autologous tumor cells pre-vaccination, to being DTH positive post vaccination. *In vitro* assays have demonstrated the induction of tumor-specific cytotoxic lymphocyte activity [7] and the appearance of high titer antibody to the vaccinating cell population.[8]

K562/GM-CSF as a universal GM-CSF producing bystander cell

For cancers where obtaining large numbers of autologous tumor cells at presentation is feasible (such as acute leukemia), Dr. Levitsky's group developed a modification of the original autologous tumor-cell vaccine formulation that greatly simplifies vaccine production. Mouse studies demonstrated that as long as GM-CSF is produced at high, sustained concentrations in close proximity to the injected irradiated tumor cells, it need not be produced by the tumor cells themselves.[19] Vaccination with irradiated, unmodified autologous tumor cells, mixed at a defined ratio with an allogeneic GM-CSF producing cell line, was shown to generate an immune response that rejected a systemic tumor burden. This immune response was equal to if not greater than that achieved with a transduced autologous tumor vaccine making GM-CSF directly.

To translate this approach to the clinic, Dr. Levitsky's group transfected the K562 cell line (originally derived from a patient in leukemic blast crisis) with a plasmid vector encoding human GM-CSF. K562/GM-CSF grows well in serum-free media, stably expresses > 1000 ng of GM-CSF / 10^6 cells/ 24 hours, and is easily expanded to large numbers for vaccine production. Clinical trials have been performed at Johns Hopkins using K562/GM-CSF as a "bystander" cell together with irradiated autologous tumor (multiple myeloma or acute myeloid leukemia), and alone in combination with imatinib (Gleevec) in CML. Analysis of vaccine biopsy sites, serum GM-CSF levels, and serial white blood cell counts indicate that GM-CSF production is sustained for at least 3 to 5 days post vaccination.

1.4 The Hodgkin's (KGEL) vaccine

Although it might be ideal to use K562/GM-CSF as a bystander vaccine together with autologous Reed-Sternberg cells, the low proportion of Reed Sternberg cells in the tumor precludes this approach. We have taken advantage of the association between HL and EBV infection to create an allogeneic vaccine (the Hodgkin's, or KGEL, vaccine) modified from K562/GM-CSF.

Creation of the KGEL vaccine

The K562 cells compromising the K562/GM-CSF vaccine were originally transfected with a plasmid (Figure 1a) containing human GM-CSF under the control of a cytomegalovirus (CMV) promoter, a hygromycin resistance gene, as well as the EBV EBNA1 gene, which is required for the function of the plasmid origin of replication. With the aim of generating a vaccine expressing defined tumor antigens expressed in EBV positive HL, the original clone was transfected with a plasmid (Figure 1b) encoding LMP2 under the control of a CMV promoter, as well as a neomycin

resistance gene. Antibiotic resistant clones were analyzed for LMP2 expression by Western blotting methods with an anti-LMP2 monoclonal antibody, and a clone with a high level of LMP2 expression was selected for generation of the Hodgkin's vaccine (also referred to as K562-EBNA1/LMP2/GM-CSF, or KGEL). Thus the KGEL vaccine expresses GM-CSF as well as the EBV antigens LMP2 and EBNA1. Both antigens are expressed in EBV+ HL and LMP2 cytotoxic T-cell responses are well defined and readily measured in the laboratory. Importantly, **because the KGEL vaccine expresses viral genes, the immunologic impact of the vaccine can be measured long before objective tumor responses.** This provides a unique opportunity to quantify vaccine-specific responses, whether the vaccine is used alone or as a GM-CSF producing bystander.

Figure 1a

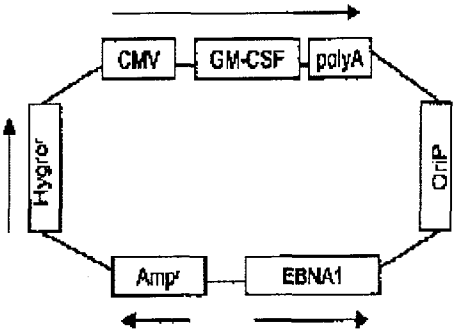

Figure 1b

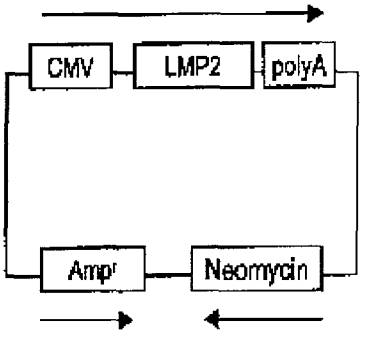

As of November 2006, 6 patients have received the KGEL vaccine in the J0528 trial of rituximab, high-dose cylcophosphamide, and vaccine for relapsed Hodgkin' lymphoma. The vaccine has been well-tolerated, with no unanticipated toxicities to date. Side effects have generally been limited to grade 1 local toxicities (erythema, induration, pruritus).

EBV as a therapeutic target

Approximately 25 to 50% of cases of classical HL, most frequently the mixed cellularity and lymphocyte deplete subtypes, are EBV-associated. EBV DNA can be detected in Hodgkin's tumor specimens and can be localized to the malignant cells. Although it is a ubiquitous virus, the only EBV reservoir in healthy seropositive individuals is an occasional B lymphocyte (typically 1/100,000 lymphocytes). With rare exceptions, EBV antigens are thus virtually tumor-specific antigenic targets. The ability to use viral antigens to target EBV-associated malignancies with adoptive cellular therapy has been demonstrated in patients undergoing allogeneic BMT. Adoptive transfer of EBV-specific T-cells was shown to be effective in preventing and sometimes treating post-transplant lymphoproliferative disease, thereby establishing EBV antigens as valid immunotherapeutic targets.[11]

EBV-associated HL presents well-defined antigenic targets. Whereas a multitude of viral antigens are expressed in PTLD, only a few antigens are expressed in Hodgkin's tumor cells: Epstein-Barr nuclear antigen 1 (EBNA1) and the transmembrane proteins, latent membrane protein 1 (LMP1) and latent membrane protein 2 (LMP2).[20] EBNA1 is recognized as a CD4+ T-cell target antigen,[21] is almost universally recognized, and has recently received renewed attention as a promising T-cell target.[22] LMP1 and 2 have emerged as the major targets for immunotherapeutic strategies that involve CD8+ effector cells, with LMP2 being better characterized.

Survivin as a therapeutic target

Although engineered to express EBV antigens, the KGEL vaccine is of clinical interest regardless of the EBV status of the tumor. K562 expresses multiple tumor antigens, including survivin, cyclins, Wilms-tumor 1, and proteinase-3, that are currently being tested as therapeutic targets. Of particular interest as a tumor antigenic target in HL is the anti-apoptotic protein, survivin. Survivin is selectively over-expressed in a wide variety of tumor types[23] including leukemias[24,25] and HL.[26] This member of the inhibitor-of-apoptosis gene family is expressed during fetal development, but its expression is limited in terminally differentiated tissues (although it may play a role in cell cycle regulation of mitotically active cells). Survivin is an attractive target because it may contribute to the malignant phenotype by inhibiting apoptosis. In a large-scale tissue array microanalysis of EBV+ and EBV- HL cases, a particularly strong relationship was observed between survivin and the presence and activation of NF-kB.[26] Intracellular staining of survivin on the K562/GM-CSF cell line has revealed abundant protein expression compared to normal bone marrow cells, and abundant expression of survivin has also been demonstrated on the KGEL vaccine (Figure 2). Another advantage to cell-based tumor vaccines is their potential to contain relevant, as yet unidentified antigens.

Figure 2: Survivin expression on the KGEL vaccine

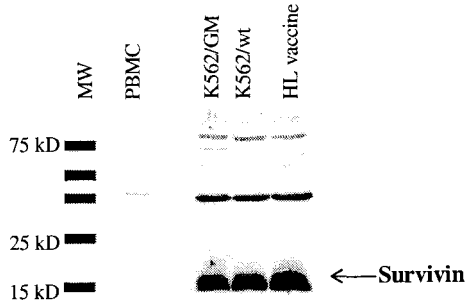

Not only has abundant expression of survivin been demonstrated in the KGEL vaccine, recently the Matsui lab has demonstrated that **the putative CD20$^+$ cHL stem cell also appears to express survivin (Figure 3). These findings provide a rationale for investing this vaccine in HL irrespective of the EBV status of the tumor.**

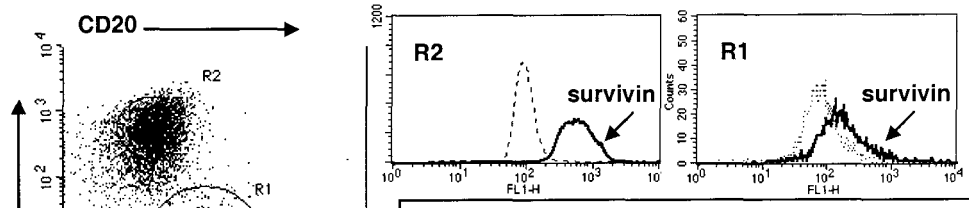

Figure 3. Flow cytometry of a classical HL cell line reveals that cells with both the Reed-Strernberg phenotype (R2) and the putative cancer stem cell phenotype (R1) express survivin. (Dotted line: isotype; bold line: anti-survivin antibody)

Preparation of clinical grade vaccine

The KGEL vaccine in this study is a clinical grade vaccine manufactured at Johns Hopkins under GMP conditions and distributed by the GEL. The vaccine has undergone extensive regulatory testing and screening for contaminating pathogens (including mycoplasma and adventitious viruses), and is stable and adapted to serum-free medium. The cells are grown in serum-free X

VIVO 15 medium containing hygromycin (1.2 mg/mL) and geneticin (0.5 mg/mL). During the final passage of production, hygromycin and geneticin are removed from the medium. The clinical lots are irradiated (10,000 rad), formulated in an injection-compatible cryoprotectant consisting of Pentaspan® [10% pentastarch in 0.9% sodium chloride injection] supplemented with 5% DMSO and 2% Human Serum Albumin, then frozen using a control rate freezer. The cells are stored in the vapor phase of a liquid nitrogen freezer until use. The product is supplied in single use vials, with each vial containing 5 x 10^7 total cells in an approximate 0.9 mL volume. For each vaccine preparation, cells are thawed, aliquoted without additional diluent into syringes, and released for immediate administration.

METHODS

Clinical trial: In this single-institution Phase I/II study, developed and written by the applicant, patients with classical Hodgkin's lymphoma will receive a series of allogeneic vaccine that expresses GM-CSF, EBV tumor antigens, and survivin. The vaccine is given as a single agent and at a fixed dose and schedule, and the primary endpoints of the study are immunologic.

Treatment plan: Patients with classical HL who have completed first-line therapy are potentially eligible. Subjects must have achieved at least a stable disease to first-line therapy with no evidence of disease progression.

A **schema** is presented below. Up to 20 patients will receive a series of KGEL vaccine beginning 4 to 6 months after first-line chemotherapy or chemoradiation. Four doses of vaccine (1 x 10^8 cells/dose) will be administered intradermally at week 0, week 3, week 6 and week 9. In addition to toxicity assessments, serial immunologic assessments will be performed to quantify vaccine responses and related immunologic parameters.

SCHEMA
(not to scale)

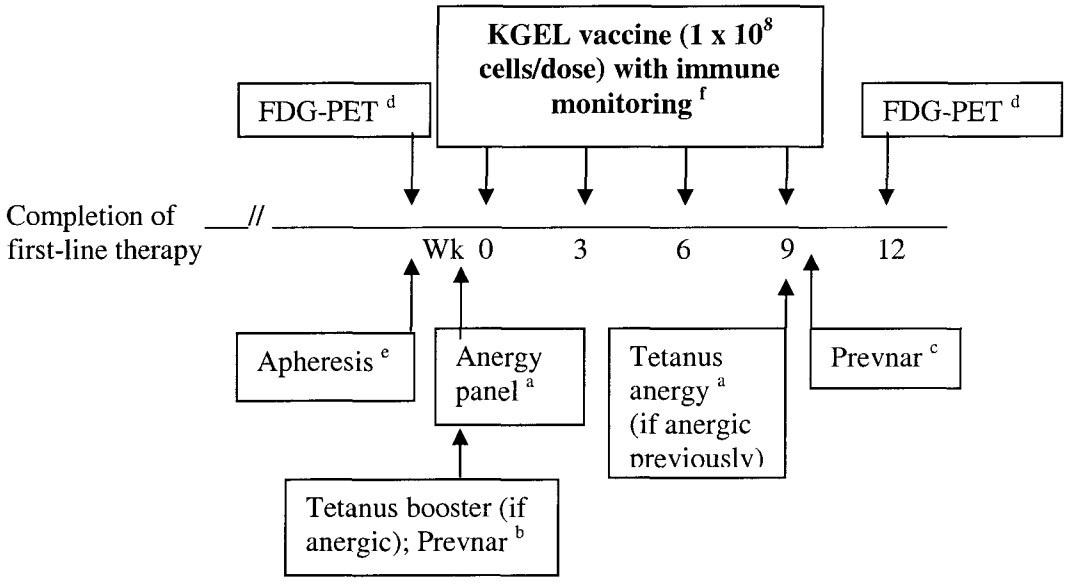

Designated time points are approximate. KGEL vaccine time points are +/- 3 days.
a Perform site evaluations 2-3 days later.
b A minimum of 3 days must separate the KGEL vaccine from the tetanus and prevnar vaccines.
c 4 days +/- 1 day after last KGEL vaccine.

d Suggested but not required. See section 6.3.
e See section 5.1.
f First KGEL vaccine must be given 4-6 months after last chemotherapy or last radiation.

Rationale for vaccine schedule: The dose and schedule of vaccine are based on prior studies using GM-CSF transduced tumor cells or anti-idiotype vaccines.[12] This is the earliest time, to our knowledge, that a vaccine has been administered following high dose therapy in the clinical setting. The goal is to expose the recovering immune system to the vaccine before tolerance develops; preclinical data support the safety of this approach.

Timing of vaccination

The potential graft-versus-lymphoma effect of allogeneic BMT,[9,10] regression of EBV-associated malignancies after cytotoxic T-cell infusion,[11] and induction of anti-tumor immunity by autologous vaccines in the non-transplant setting [12-14] demonstrate that immune manipulation has therapeutic potential for lymphomas. In murine models, therapeutic vaccination has been quite effective against a variety of cancers.
Interestingly the vaccine effect may be enhanced by integration with chemotherapy, even high dose therapy.[1] The best time to incorporate immunotherapeutic approaches in the post-high dose therapy setting is not yet known. Importantly, however, it has been demonstrated that vaccines can elicit significant anti-tumor responses early following high dose therapy, prior to full immune reconstitution.[1] The rebounding immune system can be highly susceptible to selective antigen priming early in the post-transplant recovery period. The T-cell repertoire is limited following transplantation and is biased toward antigens encountered during that time,[15] including tumor antigens.[16] This antigen-driven response naturally diminishes over time and tolerance can ensue.[17] In murine models of non-Hodgkin's lymphoma, Dr. Levitsky's group demonstrated that vaccination with irradiated, GM-CSF producing autologous tumor cells shortly following transplantation produces a significant anti-tumor effect and prolonged disease-free survival.[1] The post-transplant period was marked by a clonal amplification of tumor-specific T-cells, which declined in association with disease progression but importantly was sustained by vaccination. There is compelling data that lymphoma-specific T-cells become activated early during immune reconstitution following radiation and/or chemotherapy.[18] Indeed, vaccination of patients as early as 30-60 days after engraftment has generated responses against idiotype protein and infectious pathogens. **Apart from the many questions about schedule and dose of cancer vaccines, experience with vaccine therapies for HL in particular is very limited. Consideration of such approaches requires a better understanding of cellular immune responses to HL.**

Statistical considerations: Primary analysis plan

This is a single institution, single-arm phase I/II study. The primary objective is to evaluate laboratory endpoints for preliminary evidence of potential efficacy. As such, a descriptive approach will be taken to evaluate toxicities and immunologic responses to the vaccine. Additionally, immunologic data collected at serial time points will be used for statistical analysis of primary endpoints.

The primary efficacy endpoint is detection of an increase in frequency of LMP-2 specific CD8+ T-cells after vaccination. Based on data from the Ambinder laboratory, fewer than 5% of patients with HL have a baseline frequency of LMP2-specific T-cells >10 spots/million PBMC on ELISPOT, whereas > 75% of healthy subjects have >10 spots/million and 20% of healthy subjects are an order of magnitude higher (>100 spots/million). With the vaccine we aim to move HL patients at least an order of magnitude higher than their collective baseline into the high-normal range of LMP2 T-cell frequencies (>100 spots/million).

The most conservative calculations assume that we can only measure responses to LMP2 in patients who are HLA A2+, approximately 40% of the population. Vaccinating 15 patients will yield approximately 6 evaluable patients to test the null hypothesis that the response rate to vaccination is 0.05 against the alternative that it is 0.50, with a one-sided significance level and power of 0.89 using an exact binomial test assuming an alpha of 0.03. Due to the small sample sizes being considered, the testing space is very discrete. As such, the possible alpha level of the tests varies depending on the sample size. These are displayed in the table below. Other outcomes are presented below based on the number of HLA A2+ patients:

N	Alternative response rate	Statistical power	Actual alpha
4	0.65	0.87	0.014
8	0.50	0.86	0.006
10	0.45	0.90	0.012

Correlative immunologic studies: Secondary correlative analyses

As a secondary correlative analysis, immunologic outcomes as well as levels of circulating clonotypic B-cells or other stem cell assays may be treated as continuous, and transformed using log or other transformation as necessary to achieve a symmetric distribution. For any given parameter, changes in outcomes over time can be calculated for each individual, means and standard deviations estimated, and the changes evaluated using parametric or non-parametric measures. These outcomes can also be treated as binary (above or below a threshold) and their relationship to vaccination and to disease status (e.g., remission or relapse) described.

As a secondary outcome, we also plan to descriptively compare whether there is an association between vaccine administration and a "flare" response on FDG-PET.

Event-free and overall survival will also be estimated using the Kaplan-Meier method.

ANTICIPATED OUTCOMES

The study represents a potential alternative to BMT, but at the same time should not prevent patients from receiving a BMT. Based on our institutional experience, it is anticipated that the regimen will be relatively well tolerated, with a treatment-related mortality of less than 5% despite some patients being heavily pretreated. We expect bone marrow aplasia to last a median of 2 weeks, with fewer than 5% of patients requiring $\geq$ 4 weeks to achieve count recovery. Based on trials with our GM-CSF "bystander" vaccine, the toxicities of this vaccine should largely be limited to injection site reactions. Cellular vaccine response will be assessed through the EBV readout assays, with responses to LMP2 and EBNA1 being compared to those against control antigens. Results may be extended to studies of immunotherapy in other B-cell lymphomas.

References

1. Borrello I, Sotomayor EM, Rattis FM, Cooke SK, Gu L, Levitsky HI. Sustaining the graft-versus-tumor effect through posttransplant immunization with granulocyte-macrophage colony-stimulating factor (GM-CSF)-producing tumor vaccines. Blood. 2000;95:3011-3019.
2. Dranoff G, Jaffee E, Lazenby A, et al. Vaccination with irradiated tumor cells engineered to secrete murine granulocyte-macrophage colony-stimulating factor stimulates potent, specific, and long-

lasting anti-tumor immunity. Proc Natl Acad Sci U S A. 1993;90:3539-3543.
3. Jaffee EM, Lazenby A, Meurer J, et al. Use of murine models of cytokine-secreting tumor vaccines to study feasibility and toxicity issues critical to designing clinical trials. J Immunother Emphasis Tumor Immunol. 1995;18:1-9.
4. Huang AY, Bruce AT, Pardoll DM, Levitsky HI. In vivo cross-priming of MHC class I-restricted antigens requires the TAP transporter. Immunity. 1996;4:349-355.
5. Dunussi-Joannopoulos K, Dranoff G, Weinstein HJ, Ferrara JL, Bierer BE, Croop JM. Gene immunotherapy in murine acute myeloid leukemia: granulocyte-macrophage colony-stimulating factor tumor cell vaccines elicit more potent antitumor immunity compared with B7 family and other cytokine vaccines. Blood. 1998;91:222-230.
6. Levitsky HI, Montgomery J, Ahmadzadeh M, et al. Immunization with granulocyte-macrophage colony-stimulating factor- transduced, but not B7-1-transduced, lymphoma cells primes idiotype- specific T cells and generates potent systemic antitumor immunity. J Immunol. 1996;156:3858-3865.
7. Soiffer R, Lynch T, Mihm M, et al. Vaccination with irradiated autologous melanoma cells engineered to secrete human granulocyte-macrophage colony-stimulating factor generates potent antitumor immunity in patients with metastatic melanoma. Proc Natl Acad Sci U S A. 1998;95:13141-13146.
8. Simons JW, Mikhak B, Chang JF, et al. Induction of immunity to prostate cancer antigens: results of a clinical trial of vaccination with irradiated autologous prostate tumor cells engineered to secrete granulocyte-macrophage colony-stimulating factor using ex vivo gene transfer. Cancer Res. 1999;59:5160-5168.
9. Jones RJ, Ambinder RF, Piantadosi S, Santos GW. Evidence of a graft-versus-lymphoma effect associated with allogeneic bone marrow transplantation. Blood. 1991;77:649-653.
10. Levine JE, Harris RE, Loberiza FR, Jr., et al. A comparison of allogeneic and autologous bone marrow transplantation for lymphoblastic lymphoma. Blood. 2003;101:2476-2482.
11. Rooney CM, Smith CA, Ng CY, et al. Infusion of cytotoxic T cells for the prevention and treatment of Epstein-Barr virus-induced lymphoma in allogeneic transplant recipients. Blood. 1998;92:1549-1555.
12. Bendandi M, Gocke CD, Kobrin CB, et al. Complete molecular remissions induced by patient-specific vaccination plus granulocyte-monocyte colony-stimulating factor against lymphoma. Nat Med. 1999;5:1171-1177.
13. Kwak LW, Campbell MJ, Czerwinski DK, Hart S, Miller RA, Levy R. Induction of immune responses in patients with B-cell lymphoma against the surface-immunoglobulin idiotype expressed by their tumors [see comments]. N Engl J Med. 1992;327:1209-1215.
14. Wilson WH, Neelapu S, White T, et al. Idiotype vaccine following EPOCH-Rituximab treatment in untreated mantle cell lymphoma [abstract]. Blood. 2002;100 (11 Suppl 1):162a.
15. Mackall CL, Bare CV, Granger LA, Sharrow SO, Titus JA, Gress RE. Thymic-independent T cell regeneration occurs via antigen-driven expansion of peripheral T cells resulting in a repertoire that is limited in diversity and prone to skewing. J Immunol. 1996;156:4609-4616.
16. Maccalli C, Farina C, Sensi M, Parmiani G, Anichini A. TCR beta-chain variable region-driven selection and massive expansion of HLA-class I-restricted antitumor CTL lines from HLA-A*0201+ melanoma patients. J Immunol. 1997;158:5902-5913.
17. Guillaume T, Rubinstein DB, Symann M. Immune reconstitution and immunotherapy after autologous hematopoietic stem cell transplantation. Blood. 1998;92:1471-1490.
18. Nigam A, Yacavone RF, Zahurak ML, et al. Immunomodulatory properties of antineoplastic drugs administered in conjunction with GM-CSF-secreting cancer cell vaccines. Int J Oncol. 1998;12:161-170.
19. Borrello I, Sotomayor EM, Cooke S, Levitsky HI. A universal granulocyte-macrophage colony-stimulating factor-producing bystander cell line for use in the formulation of autologous tumor cell- based vaccines [In Process Citation]. Hum Gene Ther. 1999;10:1983-1991.
20. Deacon EM, Pallesen G, Niedobitek G, et al. Epstein-Barr virus and Hodgkin's disease:

transcriptional analysis of virus latency in the malignant cells. J Exp Med. 1993;177:339-349.
21. Leen A, Meij P, Redchenko I, et al. Differential immunogenicity of Epstein-Barr virus latent-cycle proteins for human CD4(+) T-helper 1 responses. J Virol. 2001;75:8649-8659.
22. Munz C. Epstein-barr virus nuclear antigen 1: from immunologically invisible to a promising T cell target. J Exp Med. 2004;199:1301-1304.
23. Ambrosini G, Adida C, Altieri DC. A novel anti-apoptosis gene, survivin, expressed in cancer and lymphoma. Nat Med. 1997;3:917-921.
24. Moriai R, Asanuma K, Kobayashi D, et al. Quantitative analysis of the anti-apoptotic gene survivin expression in malignant haematopoietic cells. Anticancer Res. 2001;21:595-600.
25. Shinozawa I, Inokuchi K, Wakabayashi I, Dan K. Disturbed expression of the anti-apoptosis gene, survivin, and EPR-1 in hematological malignancies. Leuk Res. 2000;24:965-970.
26. Garcia JF, Camacho FI, Morente M, et al. Hodgkin and Reed-Sternberg cells harbor alterations in the major tumor suppressor pathways and cell-cycle checkpoints: analyses using tissue microarrays. Blood. 2003;101:681-689.
27. Reya T, Morrison SJ, Clarke MF, Weissman IL. Stem cells, cancer, and cancer stem cells. Nature. 2001;414:105-111.
28. Jones RJ, Matsui WH, Smith BD. Cancer stem cells: are we missing the target? J Natl Cancer Inst. 2004;96:583-585.
29. Jahr S, Hentze H, Englisch S, et al. DNA fragments in the blood plasma of cancer patients: quantitations and evidence for their origin from apoptotic and necrotic cells. Cancer Res. 2001;61:1659-1665.
30. Jaffe ES, Harris NL, Stein H, Vardiman JW eds. World Health Organization Classification of Tumours: Pathology and Genetics of Tumours of Haematolpoietic and Lymphoid Tissues. Lyon: IARC Press; 2001.
31. Simons JW, Jaffee EM, Weber CE, et al. Bioactivity of autologous irradiated renal cell carcinoma vaccines generated by ex vivo granulocyte-macrophage colony-stimulating factor gene transfer. Cancer Res. 1997;57:1537-1546.
32. Jaffee EM, Abrams R, Cameron J, et al. A phase I clinical trial of lethally irradiated allogeneic pancreatic tumor cells transfected with the GM-CSF gene for the treatment of pancreatic adenocarcinoma. Hum Gene Ther. 1998;9:1951-1971.
33. Hasenclever D, Diehl V. A prognostic score for advanced Hodgkin's disease. International Prognostic Factors Project on Advanced Hodgkin's Disease. N Engl J Med. 1998;339:1506-1514.